1606 STAINLESS STEEL COUPLINGS

PRICE INFORMATION

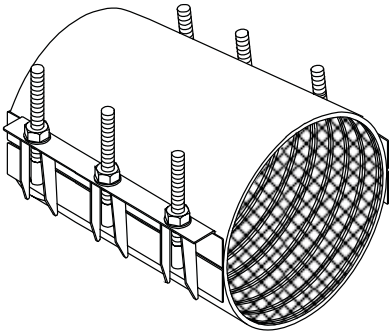

		LIST PRICE				
Nominal Pipe Size	**Maximum Pressure (PSI)**	**Style 1 6" Shell**	**Style 1 12" Shell**	**Style 2 12" Shell**	**Style 3 18" Shell**	**Style 3 24" Shell**
4	150	$ 141.51	$ 256.60	$ 413.26		
6	150	$ 154.34	$ 281.38	$ 448.63		
8	150	$ 181.70	$ 301.64	$ 478.25		
10	150		$ 326.30	$ 506.42		
12	150		$ 370.73	$ 539.05		
14	125		$ 421.11	$ 573.37		
16	100				$ 1,145.51	$ 1,454.36
18	100				$ 1,206.25	$ 1,528.44
20	100					$ 1,701.63
22	100					$ 1,758.15
24	100					$ 1,818.44

Note: Other sizes and pressure ratings available
Bolt torque limit for all sizes is 80 ft/lbs
ROBAR 9626 Adjustable stainless steel Inserts are recommended for use on HDPE
4.80"OD is the minimum OD 1606 Couplings can be sized to fit

ROBAR INDUSTRIES LTD.
BC Phone (604) 591-8811 / 1-800-663-6553
Fax (604) 591-5288
Email waterworks@robarindustries.com

LES PRODUITS INDUSTRIELS ROBAR INC.
QUEBEC Phone (450) 441-7525 / 1-800-315-9525
Fax (450) 441-4894
Web: www.Robarindustries.com